HSF RoHS

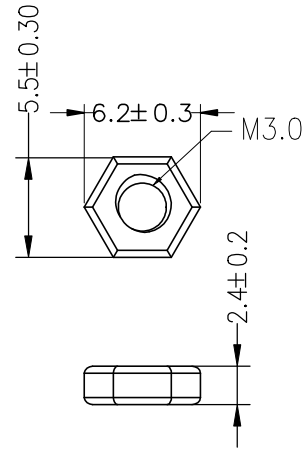

螺帽*2

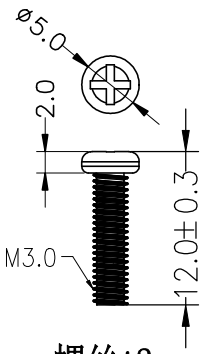

螺丝*2

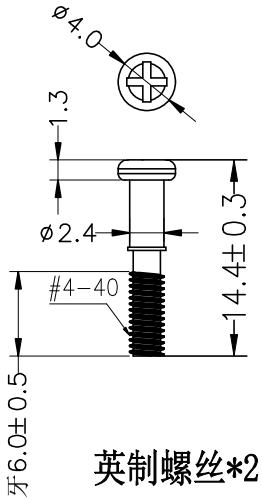

英制螺丝*2

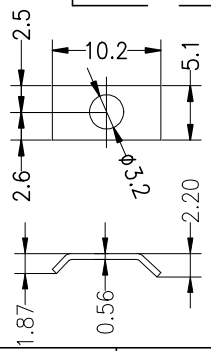

垫片*2

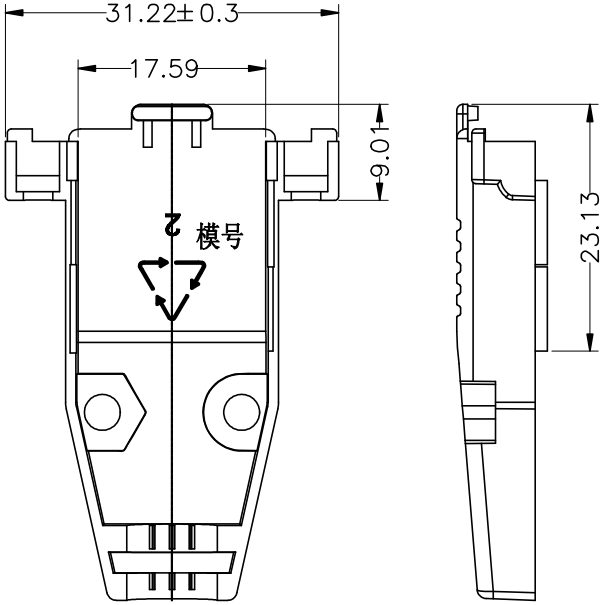

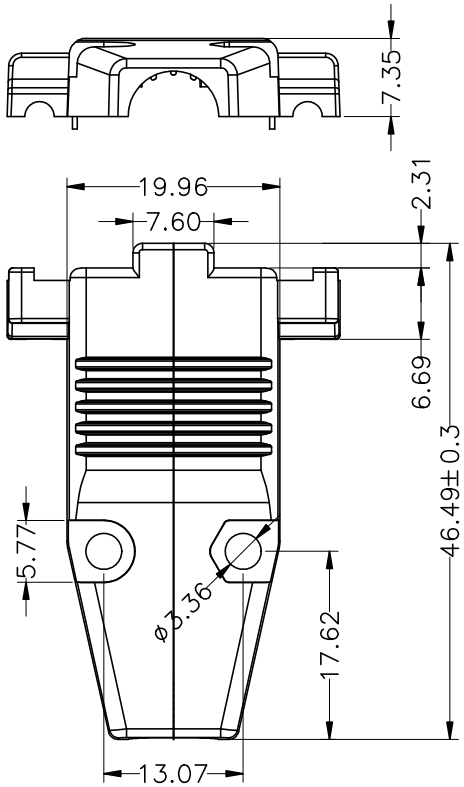

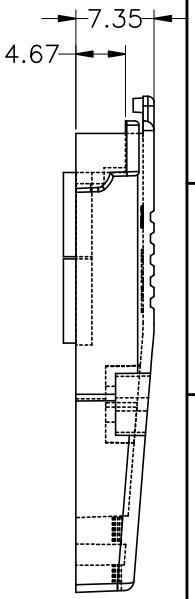

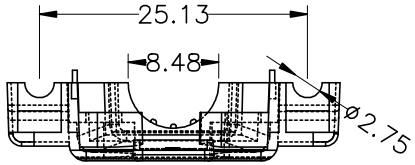

REV	DATE	MODIFICATION DESCRIPTION	CHANGE
A0	2018.11.26	NEW DRAWING	

OPERATION				
DRAW	YiYuSheng	18.11.26	X.X	±0.30
CHECK			X.XX	±0.20
			X.XXX	±0.10
APPROVE			Angle	±3°
			DIM	TOL

SCALE	FIT
UNIT	mm
SIZE	A4
SHEET	1/1
PROJ.	

JILN® 深圳锦凌电子股份有限公司
SHENZHEN JINLING ELECTRONICS CO.,LTD
Tel：86-755-27483253 Fax：86-755-2997-5588

PART NO.	S6235-09NI01
TITLE:	DB9P-台型锌合金外壳+螺丝配件